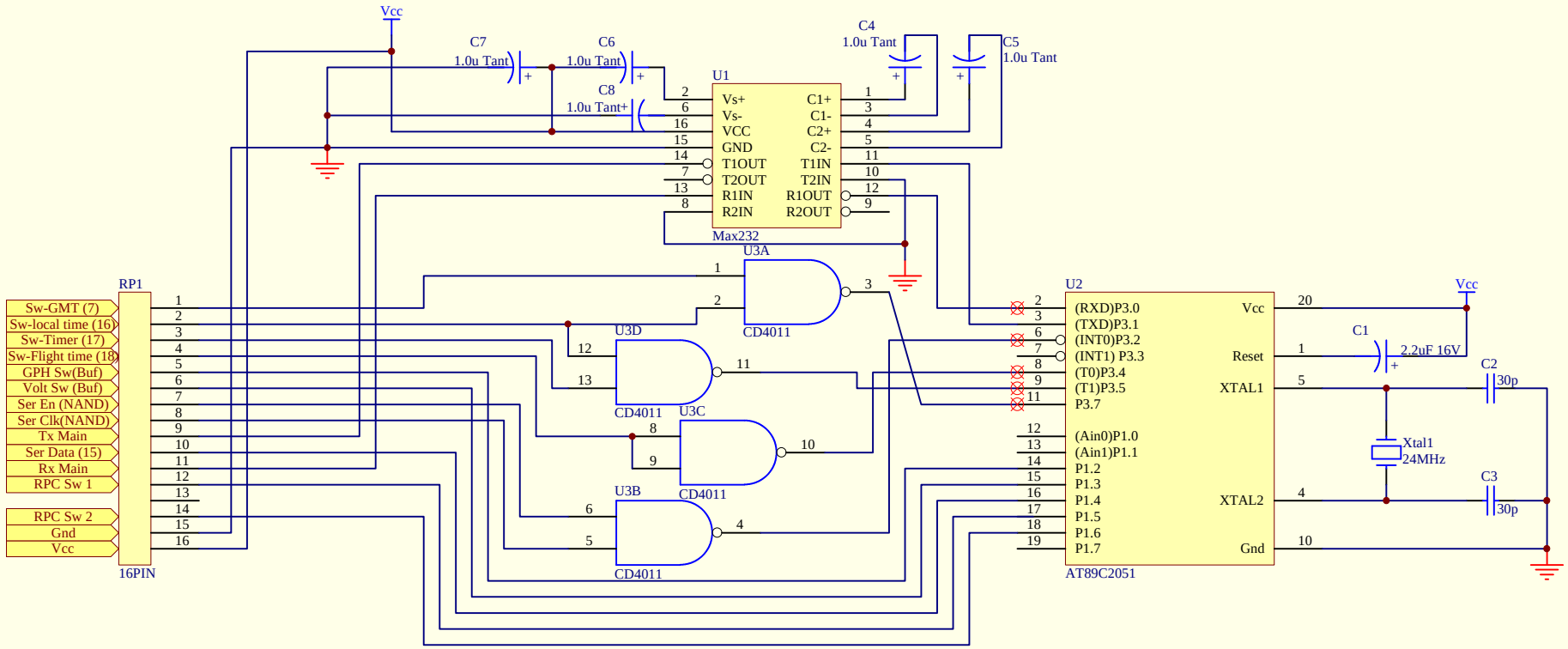

Title			
RMI uMonitor Serial Connection			*Boardwalk Enterprise Pty Ltd.* *18 Young Street* *Ivanhoe* *Vic* *Australia 3079*
Size: A4	Number: 1	Revision: 4	
File: I:\RV\Protel\RMISmallSerial3.sch	Date: 2-Dec-2001	Time: 16:15:00	Sheet 1 of 1

Protel Technology